material thickness: 15mm

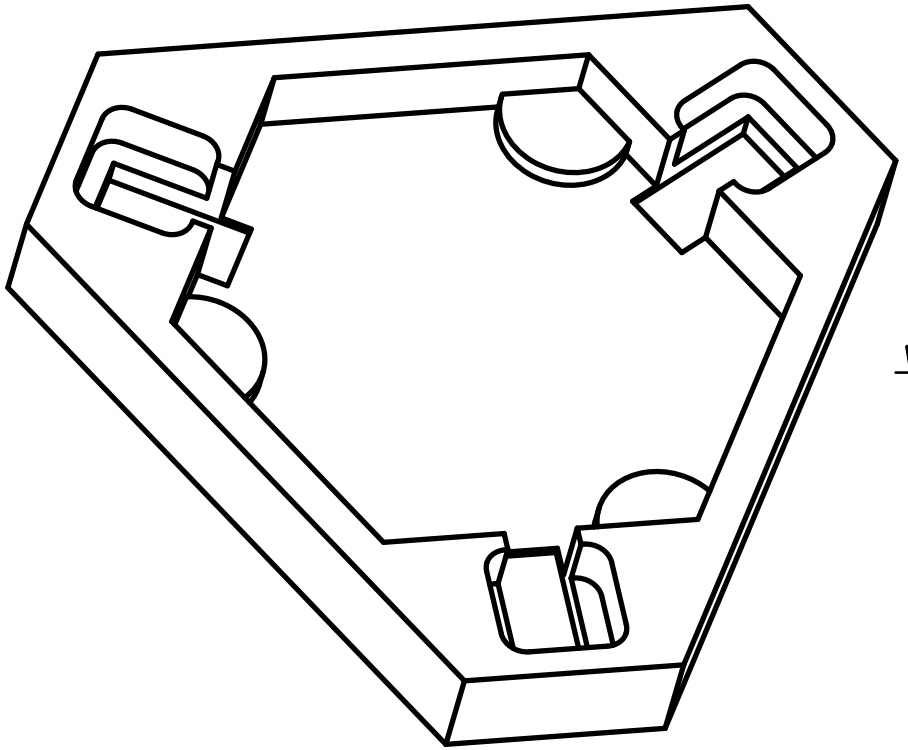

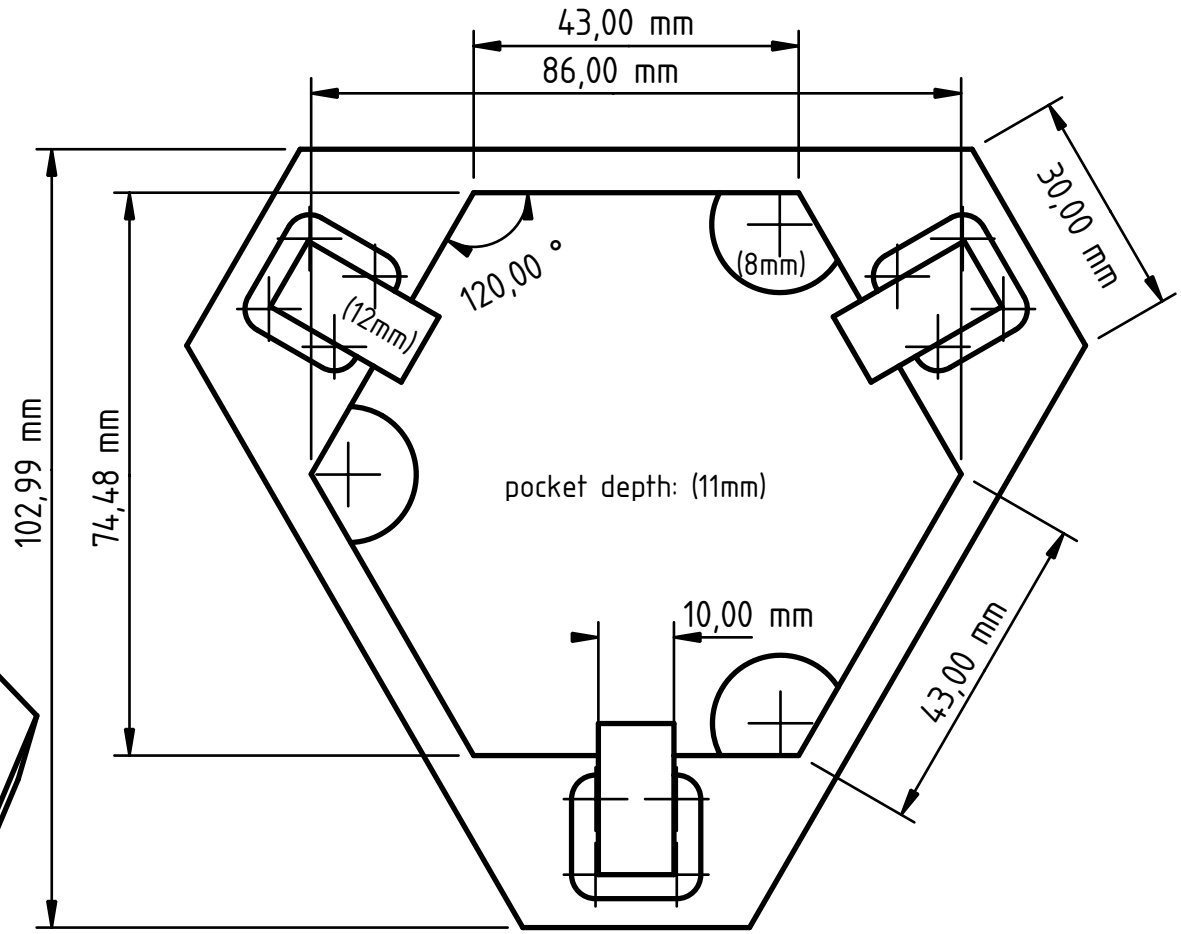

DESIGNED BY: Julian Schindler DATE: 25.07.2021		Spacetube-Basecover www.redlabs.de		
SIZE A4				
SCALE 1:1	WEIGHT (kg) -	DRAWING NUMBER RL100401	SHEET 2	

This drawing is our property; it can't be reproduced or communicated without our written consent.